Inverse LQ Regulator of Systems with Time Delay

Professor Tomohiro Kubo

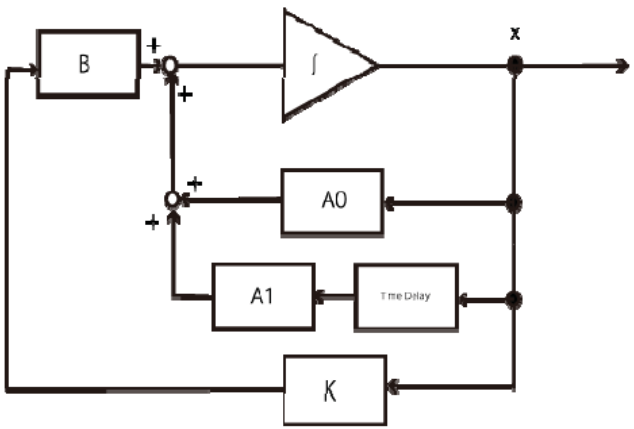

Fig.1 Feedback control of a time delay system

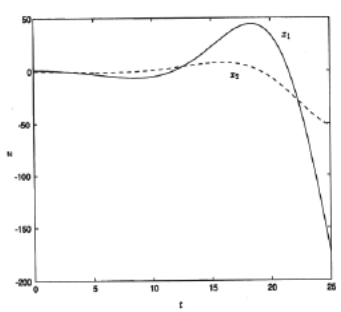

Fig.2 Open loop system

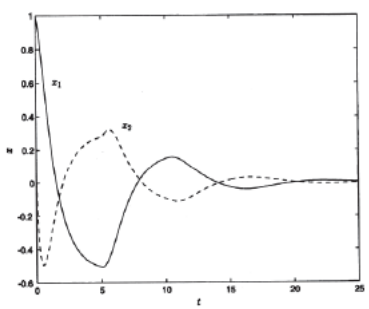

Fig.3 Closed loop system

Content:

Systems with time delay belong to a class of infinite dimensional systems. To construct a linear quadratic regulator of such a system, generally a solution of an infinite dimensional Riccati equation is required to calculate the feedback gain and a real-time integral operation is included in the feedback law.

To stabilize such systems, we propose a method to construct an inverse linear quadratic regulator. The feedback gain can be calculated from a solution of a finite dimensional Riccati equation or a finite dimensional linear matrix inequality, and the feedback law is so-called the memoryless feedback which doesn't include a real-time integral operation as shown in Fig. 1. The resulting closed loop system can be shown to be stable (compare Fig. 2 and Fig. 3 for example), and to be a linear quadratic regulator for some quadratic cost functional. Moreover, it is assured to have a good robustness property against a class of static nonlinear perturbations or dynamic linear perturbations in the input channel as well as a linear quadratic regulator for systems without time delay.

Keywords : time delay, LQ regulator, robust stability

E-mail: kubo@ee.tokushima-u.ac.jp

Tel. +81-88-656-7466

Fax: +81-88-656-7466